Laboratorio di Sistemi Operativi
Anno Accademico 2006-2007

uMPS Introduction

Mauro Morsiani

A simulator, why?

Modern hardware architectures:

- may be too complex to understand
- may be not useful for teaching and demonstration purposes
- may require additional costs for effective development (software development kit, test boards, etc.)
- may add unnecessary complexities to the development cycle

A simulator, why?

A simulated hardware architecture:

- may be tailored to provide exactly the “right” features for teaching and demonstration purposes
- may be provided with an integrated development kit, graphical user interface and debug tools
- may be deployed on available CS lab equipment
- will probably be a lot slower than the real one (not always a bad feature)

MIPS, MPS and uMPS

MIPS: Microprocessor (without) Interlocking Pipe Stages

- one of the original RISC processor architectures from the ’80s
- with a lot of interesting features
- still widely used (on embedded systems, but also …)

MPS:

- a complete (simulated) computer system integrating an (emulated) MIPS R3000 CPU

uMPS:

- a complete (simulated) computer system integrating an (emulated) MIPS R3000 CPU with physical and virtual memory addressing

A MIPS processor, why?

MIPS R3000 processor with MIPS I instruction set:

is reasonably easy to understand

provides useful features and insights for instructional purposes

documentation is widely available

is supported by the GNU gcc compiler and development kit

does not provide a pre-defined devices interface

More info (and manuals too):

http://en.wikipedia.org/wiki/MIPS_architecture

MPS and uMPS

MPS simulator provides:

a complete emulation of MIPS R3000 main processor and CP0 (MIPS I instruction set)

RAM

ROM (for bootstrap and basic functions)

a basic set of devices:
- TOD clock
- disks
- tapes
- printers
- tty-like terminals

an integrated development kit, with graphical user interface, a cross-compiler (gcc) and debug tools

MPS and uMPS

uMPS:

(almost) “all of the above”
ethernet-like network interfaces

physical and virtual memory addressing

a streamlined user interface

Why uMPS and not MPS?

Because having virtual memory “right from the beginning” adds unnecessary complexities when writing an OS from scratch…

MPS and uMPS may be compiled on:

FreeBSD, GNU/Linux distributions (x86 and PPC)

Sun Solaris

uMPS processor architecture

The uMPS architecture

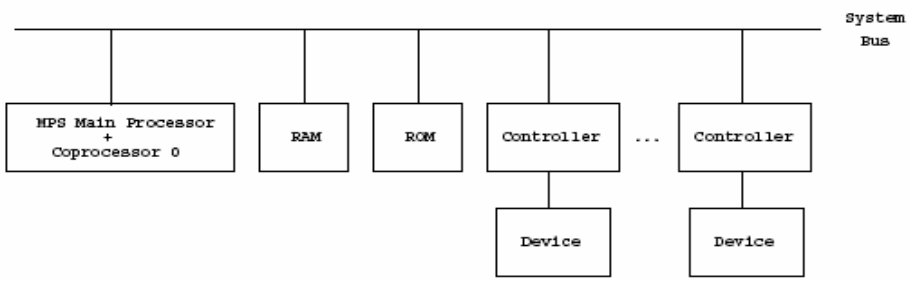

uMPS processor architecture

The MIPS processor architecture

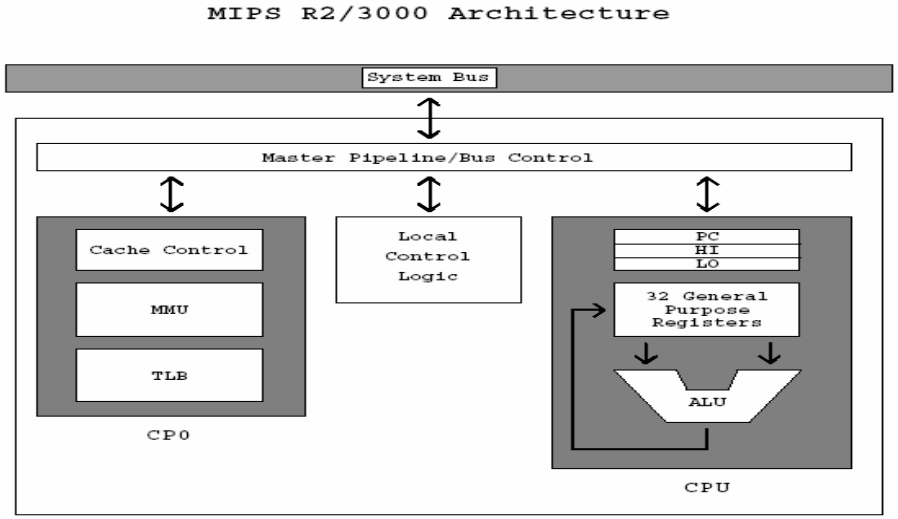

uMPS processor architecture

The MIPS processor architecture (cont'd)

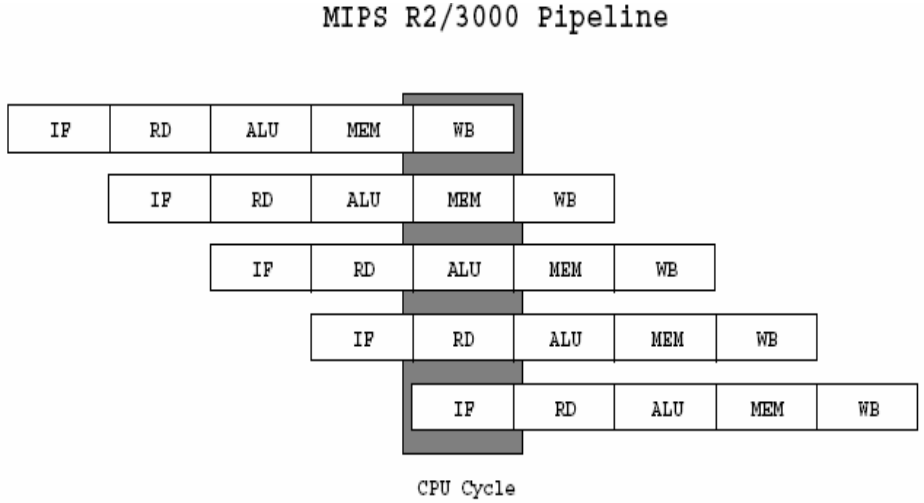

uMPS processor architecture

MIPS delayed load:

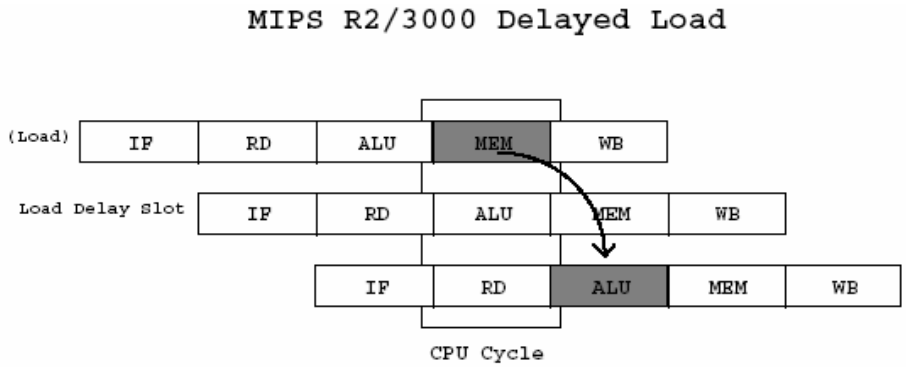

uMPS processor architecture

MIPS delayed branch:

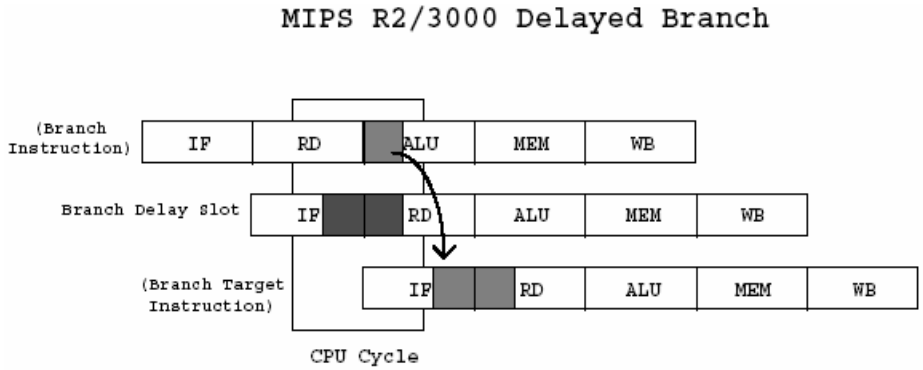

uMPS processor architecture

uMPS processor features:

RISC-type integer instruction set on a load-store architecture

32-bit word for registers/instructions/addressing (4 GB physical address space)

Pipelined execution, delayed loads and branches

32 general purpose registers (**GPR**) denoted **$0**. . .**$31**

- Register **$0** is hardwired to zero (0)
- Registers **$1**. . .**$31** (also with mnemonic designation)

uMPS processor architecture

uMPS processor features (cont'd):

all of **$1**. . .**$31** registers may be used, but some conventions exist, for example:

- **$26** and **$27** (**$k0** and **$k1**) are reserved to kernel use

HI and **LO,** special registers for holding the results from multiplication and division operations

PC, the program counter

uMPS processor architecture

uMPS processor features (cont'd):

CP0 (CoProcessor 0) is incorporated into the main CPU and provides:

- two processor operation modes:
  - kernel-mode
  - user-mode
- exception handling
- virtual memory addressing

uMPS processor architecture

uMPS processor features (cont'd):

CP0 has 8 registers:

- **Status** register
- used for exception handling:
  - **Cause**
  - **EPC**
- used for virtual memory addressing:
  - **Index**
  - **Random**
  - **EntryHi**
  - **EntryLo**
  - **BadVAddr**

uMPS processor architecture

Miscellaneous uMPS processor features:

Endianness:

- the uMPS processor may operate in big-endian and little-endian mode (the emulator uses the endianness of the host architecture)
- a different cross-compiler set is required

CP1: optional coprocessor for floating point support

- unimplemented
- processor traps if floating point instructions are executed or CP1 access is attempted

uMPS processor architecture

Big endianness:

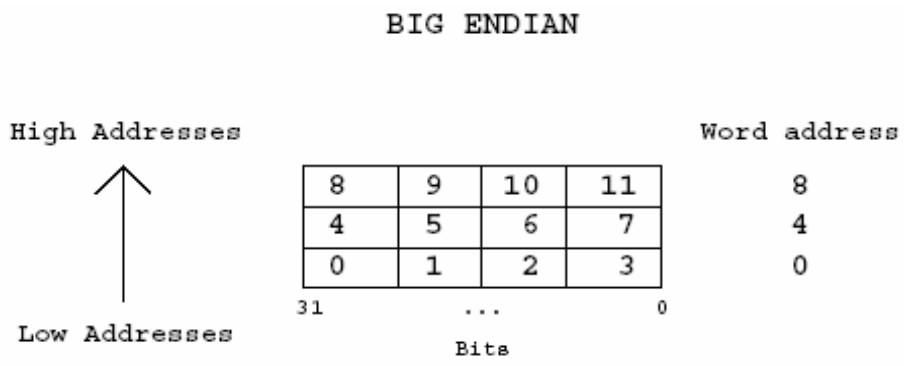

uMPS processor architecture

Little endianness:

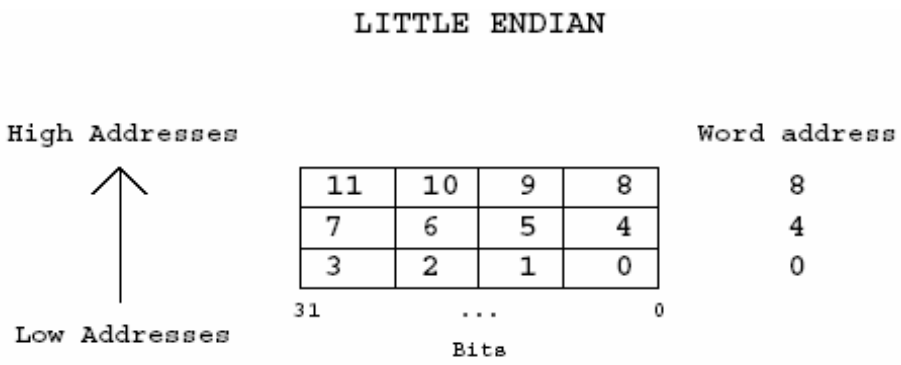

uMPS processor architecture

uMPS physical memory address format:

Physical Frame Number and **Offset**

uMPS processor architecture

uMPS virtual memory address format:

Segment Number, **Virtual Page Number** and **Offset**

ASID (Address Space IDentifier)**:** 0..63 (0 for Kernel)

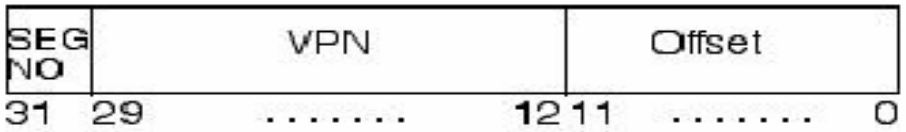

uMPS processor architecture

Status register structure:

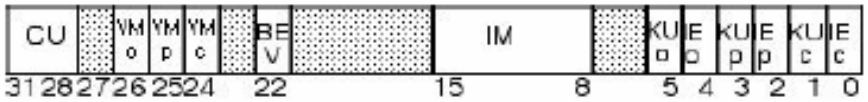

uMPS processor architecture

Status register structure:

IE: Interrupt Enable

KU: Kernel/User mode (kernel = 0)

IM: Interrupt Mask

VM: Virtual Memory

BEV: Bootstrap Exception Vector

CU: Coprocessor Usable

uMPS processor architecture

uMPS processor status at bootstrap:

CP0 is enabled

Virtual Memory is off

Bootstrap Exception Vector bit is on

Processor is in Kernel mode

PC = 0x1FC0.0000 (in boot ROM)

uMPS processor architecture

Exception handling:

EPC (Exception PC): is automatically corrected by the CPU if **BD** bit is set, to allow re-execution of the branch

Cause:

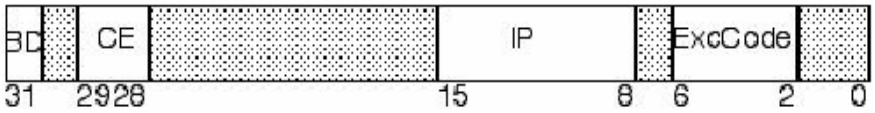

uMPS processor architecture

Exception handling (cont'd):

Cause explained:

IP: Interrupt Pending

BD: Branch Delay

CE: Coprocessor Error

ExcCode

uMPS processor architecture

ExcCode:

Number	Code	Description
0	*Int*	External Device Interrupt
1	*Mod*	TLB-Modification Exception
2	*TLBL*	TLB Invalid Exception: on a Load instr. or instruction fetch
3	*TLBS*	TLB Invalid Exception: on a Store instr.
4	*AdEL*	Address Error Exception: on a Load or instruction fetch
5	*AdES*	Address Error Exception: on a Store instr.
6	*IBE*	Bus Error Exception: on an instruction fetch
7	*DBE*	Bus Error Exception: on a Load/Store data access
8	*Sys*	Syscall Exception
9	*Bp*	Breakpoint Exception
10	*RI*	Reserved Instruction Exception
11	*CpU*	Coprocessor Unusable Exception
12	*OV*	Arithmetic Overflow Exception
13	*BdPT*	Bad Page Table
14	*PTMs*	Page Table Miss

uMPS processor architecture

Exception handling (cont'd):

Exception types:

Program Traps (PgmTrap)

SYSCALL/Breakpoint (SYS/Bp)

TLB Management (TLB)

Interrupts (Ints)

uMPS processor architecture

Exception handling (cont'd):

Program Traps (PgmTrap)

- Address Error (*AdEL* & *AdES*)
- Bus Error (*IBE* & *DBE*)
- Reserved Instruction (*RI*)
- Coprocessor Unusable (*CpU*)
- Arithmetic Overflow (*Ov*)

SYSCALL/Breakpoint (SYS/Bp)

- SYSCALL instruction
- BREAK instruction

uMPS processor architecture

Exception handling (cont'd):

TLB Management (TLB)

- TLB-Modification (*Mod*)
- TLB-Invalid (*TLBL* & *TLBS*)
- Bad-PgTbl (*BdPT*)
- PTE-MISS (*PTMs*)

Interrupts (Ints)

- remember **Status.IM** mask and **Status.IEc** bit
- hardware and software interrupts

uMPS processor architecture

uMPS processor actions on exception:

Basic operations:

- **EPC** stores the current **PC**
- **BD bit** is set if required
- **Cause.ExcCode** is set
- **Status.VM, KU** and **IE** stacks are pushed:

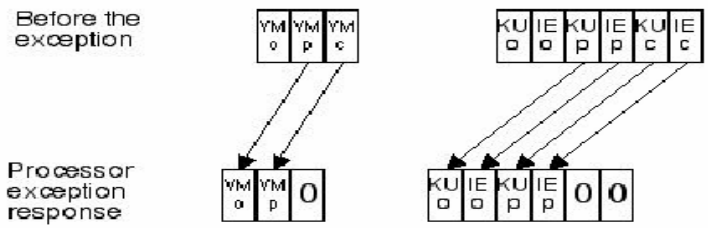

uMPS processor architecture

uMPS processor actions on exception (cont'd):

Exception-specific operations:

- Address Error (*AdEL* & *AdES*): set **BadVAddr**
- Coprocessor Unusable (*CpU*): set **Cause.CE**
- *Interrupts* (Ints): set **Cause.IP**
- *TLB Management* (TLB):
  - set **BadVAddr**
  - load **EntryHi.SEGNO** and **EntryHi.VPN**

uMPS processor architecture

uMPS processor actions on exception (cont'd):

At the end:

load **PC** with a fixed address in ROM:

0x1FC0.0180 if **Status.BEV** is set

0x0000.0080 if **Status.BEV** is not set

All this in *one atomic operation*

ROM exception handlers will perform specific actions and set some exception types:

Bad-PgTbl (*BdPT*)

PTE-MISS (*PTMs*)

uMPS processor architecture

ROM exception handler first task:

to save the current processor state (the "old" one) and to load a new state (the "new" one)

A processor state contains:

1 word for the **EntryHi CP0** register (contains the current ASID, **EntryHi.ASID**)

1 word for the **Cause CP0** register

1 word for the **Status CP0** register

1 word for the **PC** (New) or **EPC** (Old)

29 words for the **GPR** registers (**GPR** registers $0, $k0, and $k1 are excluded)

uMPS processor architecture

But where is the ROM?

uMPS physical memory map (Kernel and User modes)

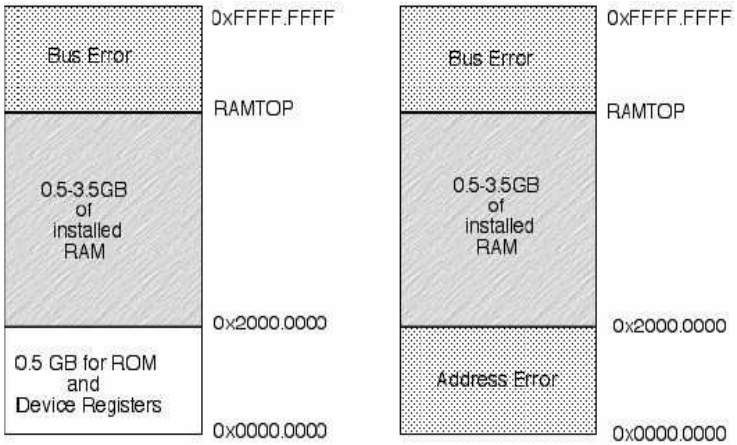

uMPS processor architecture

How it is mapped?

ROM and device registers area:

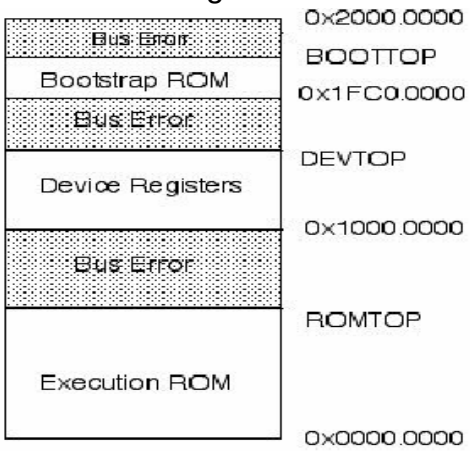

uMPS processor architecture

But where is the processor state stored?

in the ROM reserved frame:

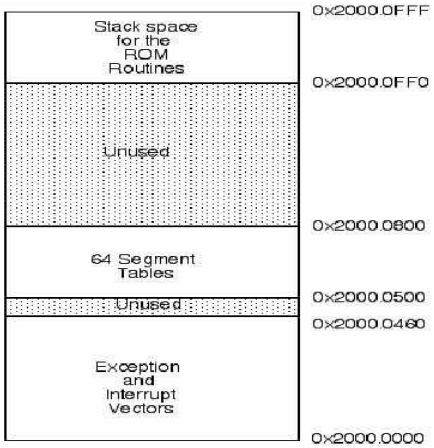

uMPS processor architecture

But where?

in the bottom part of the ROM reserved frame:

uMPS processor architecture

- **Ending the exception handling:**

ROM handler (hopefully) will load a processor state and**:**

jump to some address

RFE (Return From Exception): pop the **KU**, **IE** and **VM** stacks

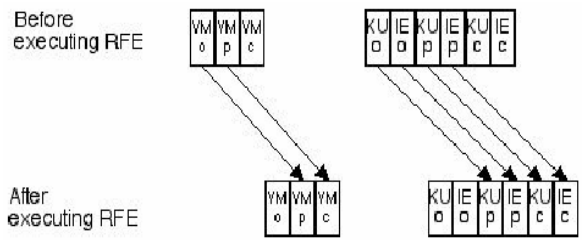

uMPS processor architecture

Beware…

look at **Cause** in Old area for knowing exactly what happened

remember that **KU**, **IE** and **VM** stacks in **Status** were pushed before being stored, and will be popped when returning from the exception

remember that **EPC** will point to the correct address to jump to after having serviced the exception (the **BD** bit tells if it was the instruction at **EPC** or the instruction in a branch delay slot to cause the exception)