Laboratorio di Sistemi Operativi
Anno Accademico 2005-2006

Kaya Phase 1 Project Specifications

Mauro Morsiani

Kaya project specifications

- **Kaya is:**
  - a complete Operating System project specification based on Dijkstra's T.H.E. System and Babaoglu and Schneider's HOCA OS
  - designed as a *multilayered* system, to be developed in a number of *phases*; can be implemented using the uMPS simulator
  - Phase 1 is the first software layer of Kaya (below it there are only bare hardware and ROM microcode)
  - Kaya Phase 1 requires the development of a *Queue Manager*

Kaya project specifications

- **Why to develop a queue manager?**
  - because processes and process queues are the basic data structures managed by any kernel
  - to provide the required ADTs (*Abstract Data Types*) to the upper levels of Kaya
  - to gain experience in software development and debugging by using the uMPS simulator

Kaya project specifications

- **Process Control Block definition (`ProcBlk`):**

```
/* process control block type */
typedef struct pcb_t {
    /* process queue fields */
    struct pcb_t        *p_next,     /* pointer to next entry */

    /* process tree fields */
                        *p_prnt,     /* pointer to parent     */
                        *p_child,    /* pointer to 1st child  */
                        *p_sib;      /* pointer to sibling    */

    state_t             p_s;         /* processor state */
    int                 *p_semAdd;   /* pointer to sema4 on   */
                                     /* which process blocked */

    /* plus other entries to be added later */
} pcb_t;
```

Kaya project specifications

- **Queue manager goals:**
  - Queue manager = a collection of *modules* that will be used in Phase 2
  - Should implement the following features:
    - allocation and de-allocation of single ProcBlk descriptors
    - maintenance of ProcBlk queues
    - maintenance of ProcBlk trees
    - maintenance of ASL (*Active Semaphore List*): a single sorted list of active semaphore descriptors, each one supporting a ProcBlk queue

Kaya project specifications

- **Queue manager features**
  - Allocation and de-allocation of single ProcBlk descriptors:
    - no OS = no heap = no dynamic memory allocation
    - how to allocate ProcBlk descriptors?
    - *statical* allocation: define an array of `MAXPROC` descriptors and use a *pcbFree* list (that is, a list of the unused descriptors), pointed by a `pcbFree_h` pointer
    - `MAXPROC` will be defined (also) in p1test.c

Kaya project specifications

- **Allocation-related functions:**
  - `initPcbs()`

/* Initialize the pcbFree list to contain all the elements of the array

`static pcb_t pcbTable[MAXPROC]`

this method will be called only once during data structure initialization

*/

  - `void freePcb(pcb_t *p)`

/* Insert the element pointed to by p onto the pcbFree list */

Kaya project specifications

- **Allocation-related functions (cont'd):**
  - `pcb_t *allocPcb()`

/* Return `NULL` if the pcbFree list is empty. Otherwise, remove an element from the pcbFree list, provide initial values for ALL of the ProcBlk's fields (i.e. `NULL` and/or 0) and then return a pointer to the removed element; ProcBlk's get reused, so it is important that no previous value persist in a ProcBlk when it gets reallocated */

uMPS software development

Queue manager features

Maintenance of ProcBlk queues:

- circular, single-linked, tail pointed; using `p_next`
- implementation efficiency may be improved introducing double-linked queues (and `p_prev`)

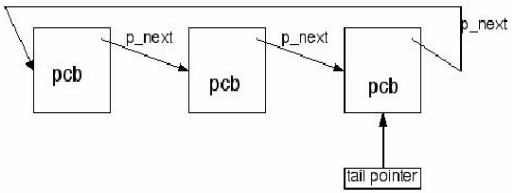

Kaya project specifications

- **Maintenance of ProcBlk queues:**
  - `pcb_t *mkEmptyProcQ()`

/* This method is used to initialize a variable to be tail pointer to a process queue; returns a pointer to the tail of an empty process queue, i.e. `NULL` */

  - `int emptyProcQ(pcb_t *tp)`

/* Return `TRUE` if the queue whose tail is pointed to by `tp` is empty; return `FALSE` otherwise */

  - `insertProcQ(pcb_t **tp, pcb_t *p)`

/* Insert the ProcBlk pointed to by p into the process queue whose tail-pointer is pointed to by `tp`; note the double indirection through `tp` to allow for the possible updating of the tail pointer as well */

Kaya project specifications

- **Maintenance of ProcBlk queues (cont'd):**
  - `pcb_t *removeProcQ(pcb_t **tp)`

/* Remove the first (i.e. head) element from the process queue whose tail-pointer is pointed to by `tp`. Return `NULL` if the process queue was initially empty; otherwise return the pointer to the removed element. Update the process queue's tail pointer if necessary */

  - `pcb_t *outProcQ(pcb_t **tp, pcb_t *p)`

/* Remove the ProcBlk pointed to by p from the process queue whose tail-pointer is pointed to by `tp`. Update the process queue's tail pointer if necessary. If the desired entry is not in the indicated queue (an error condition), return `NULL`; otherwise, return `p`. Note that p can point to any element of the process queue */

Kaya project specifications

- **Maintenance of ProcBlk queues (cont'd):**
  - `pcb_t *headProcQ(pcb_t *tp)`

/* Return a pointer to the first ProcBlk from the process queue whose tail is pointed to by `tp`. Do not remove this ProcBlk from the process queue. Return `NULL` if the process queue is empty */

uMPS software development

Queue manager features

Maintenance of ProcBlk trees:

- implemented using `p_prnt`, `p_child`, `p_sib`

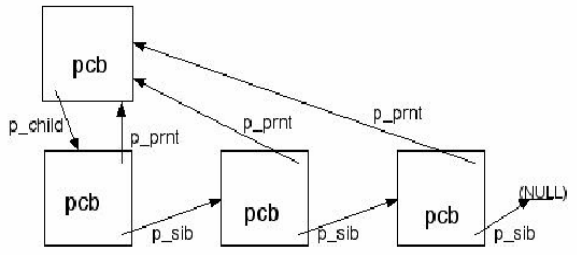

Kaya project specifications

- **Maintenance of ProcBlk trees:**
  - `int emptyChild(pcb_t *p)`

/* Return TRUE if the ProcBlk pointed to by p has no children. Return FALSE otherwise. */

  - `insertChild(pcb_t *prnt, pcb_t *p)`

/* Make the ProcBlk pointed to by p a child of the ProcBlk pointed to by prnt */

/* in other words: insert p in the process tree as a child of prnt */

Kaya project specifications

- **Maintenance of ProcBlk trees (cont'd):**
  - `pcb_t *removeChild(pcb_t *p)`

/* Make the first child of the ProcBlk pointed to by p no longer a child of p. Return NULL if initially there were no children of p. Otherwise, return a pointer to this removed first child ProcBlk. */

/* in other words: if p has children, remove the first one from the tree and return a pointer to it; if p has no children, return NULL */

  - `pcb_t *outChild(pcb_t *p)`

/* Make the ProcBlk pointed to by p no longer the child of its parent. If the ProcBlk pointed to by p has no parent, return NULL; otherwise, return p. Note that the element pointed to by p need not be the first child of its parent. */

/* in other words: look in the tree for the ProcBlk pointed to by p: if it has no parent, return NULL; if it does have a parent, remove p from the tree and return p */

uMPS software development

Queue manager features

ASL (*Active Semaphore List*):

- A semaphore is an integer
- A semaphore is *active* if at least one ProcBlk is associated to it

Suggested ASL implementation:

- sorted NULL-terminated single-linked list pointed to by semd_h, built using s_next pointer
- s_procQ is the tail pointer of a ProcBlk queue
- a free list of MAXPROC elements is required (as for ProcBlks)

```
/* semaphore descriptor type */
typedef struct semd_t {
    struct semd_t *s_next;     /* next element on the ASL */
    int           *s_semAdd;   /* pointer to the semaphore*/
    pcb_t         *s_procQ;    /* tail pointer to a       */
                               /* process queue           */
} semd_t;
```

uMPS software development

ASL Maintenance

ASL structure:

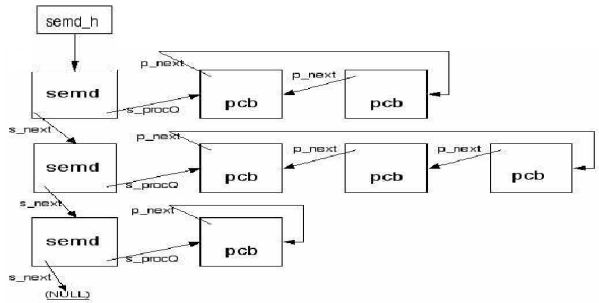

Kaya project specifications

- **ASL maintenance:**
  - `initASL()`

/* Initialize the semdFree list to contain all the elements of the array

`static semd_t semdTable[MAXPROC]`

This method will be only called once during data structure initialization */

- `pcb_t *headBlocked(int *semAdd)`
- /* Return a pointer to the ProcBlk that is at the head of the process queue associated with the semaphore `semAdd`. Return `NULL` if `semAdd` is not found on the ASL or if the process queue associated with `semAdd` is empty */

Kaya project specifications

- **ASL maintenance (cont'd):**
  - `int insertBlocked(int *semAdd, pcb_t *p)`

/* Insert the ProcBlk pointed to by p at the tail of the process queue associated with the semaphore whose physical address is `semAdd` and set the semaphore address of `p` to `semAdd`. If the semaphore is currently not active (i.e. there is no descriptor for it in the ASL), allocate a new descriptor from the semdFree list, insert it in the ASL (at the appropriate position), initialize all of the fields (i.e. set `s_semAdd` to `semAdd`, and `s_procq` to `mkEmptyProcQ()`), and proceed as above. If a new semaphore descriptor needs to be allocated and the semdFree list is empty, return `TRUE`. In all other cases return `FALSE` */

Kaya project specifications

- **ASL maintenance (cont'd):**
  - `pcb_t *removeBlocked(int *semAdd)`
  - /* Search the ASL for a descriptor of this semaphore. If none is found, return `NULL`; otherwise, remove the first (i.e. head) ProcBlk from the process queue of the found semaphore descriptor and return a pointer to it. If the process queue for this semaphore becomes empty after this (`emptyProcQ(s_procq)` is `TRUE`), remove the semaphore descriptor from the ASL and return it to the semdFree list */
  - `pcb_t *outBlocked(pcb_t *p)`
  - /* Remove the ProcBlk pointed to by p from the process queue associated with p's semaphore (`p->p_semAdd`) on the ASL. If ProcBlk pointed to by p does not appear in the process queue associated with p's semaphore, which is an error condition, return `NULL`; otherwise, return p */

Kaya project specifications

- **Some observations on Phase 1:**
  - Specifications may not look clear:
    - you have to think there is a bigger picture
    - focus on module structure and features
  - Writing the code:
    - start writing stubs; build one step at a time
    - keep it simple
    - check for error conditions (plan for the unforeseen)
    - analyze and understand `p1test.c`
    - look at the examples provided with uMPS
  - remember `#define HIDDEN static` for module data structures